NZ Support:
P: 0800 683 352
E: sales@utemaster.co.nz
W: www.utemaster.co.nz

Australia Support:
P: 1800 43 345
E: sales@utemaster.com.au
W: www.utemaster.com.au

Ram 1500—6'4" Bed
Ram 2500
Standard Load-Lid™ Fitting Instructions

Fitting time:
30-60 minutes

Despatch list:

CT5	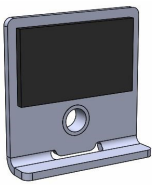	**x6**
M8 Fender Washer	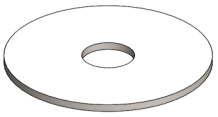	**x6**
M8 Spring Washer	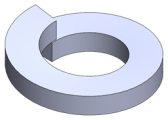	**x6**
TK-M8x25	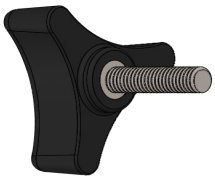	**x6**

© Copyright Utemaster NZ Ltd.

NZ Support:
P: 0800 683 352
E: sales@utemaster.co.nz
W: www.utemaster.co.nz

Australia Support:
P: 1800 43 345
E: sales@utemaster.com.au
W: www.utemaster.com.au

1

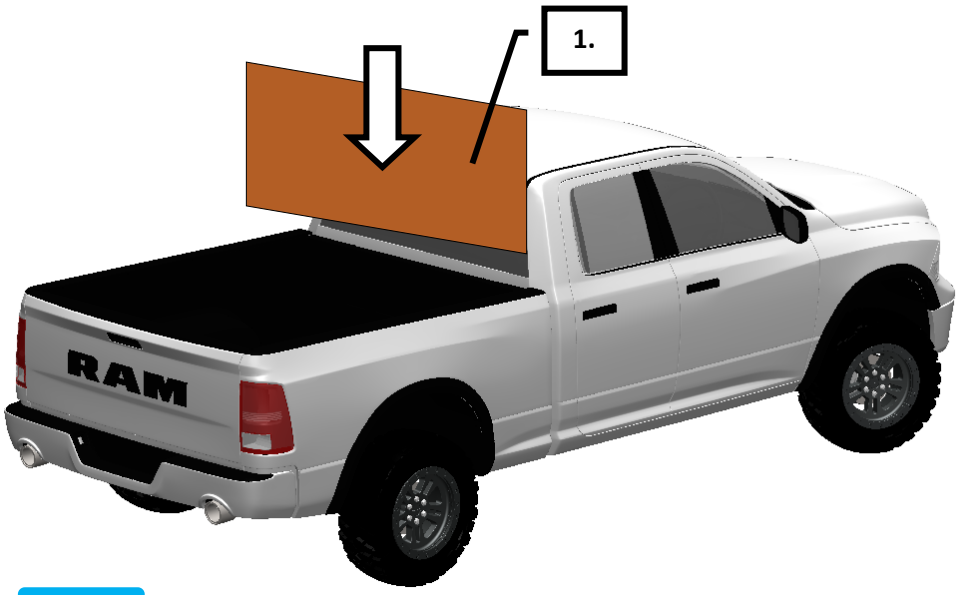

1. Customer provided cardboard.

Note: Place cardboard between cab and tray to protect the paint from scratching during installation.

2

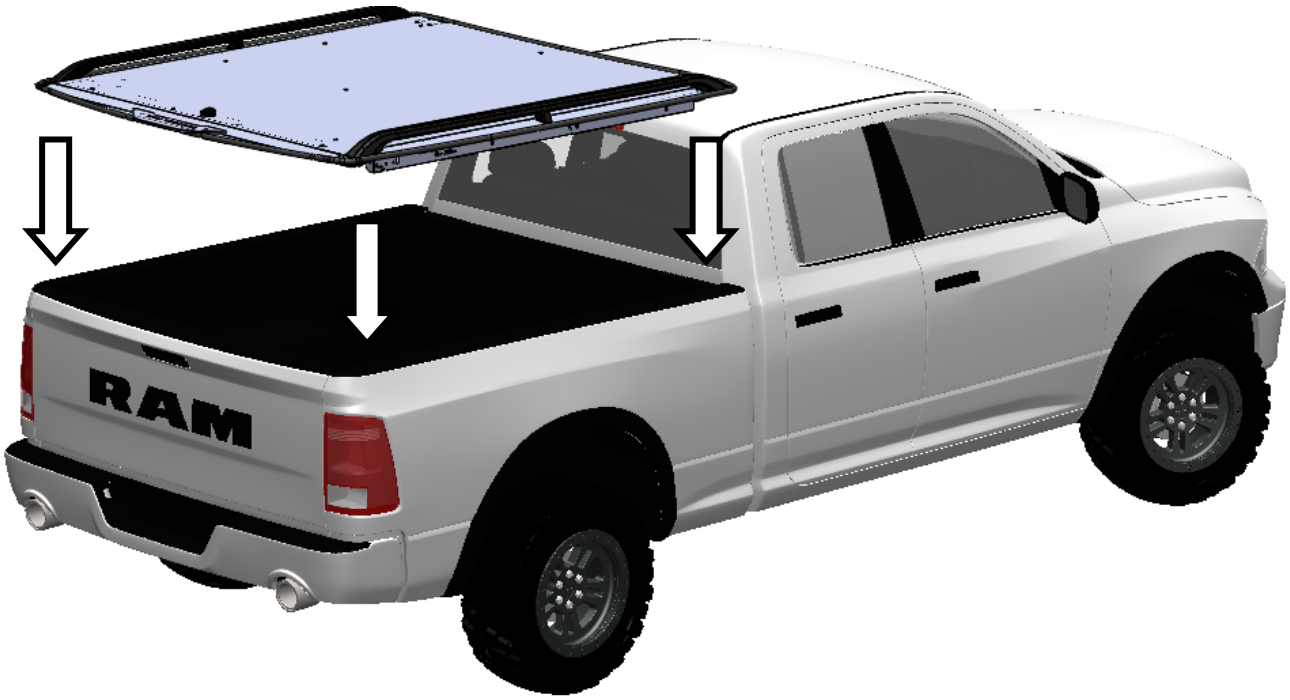

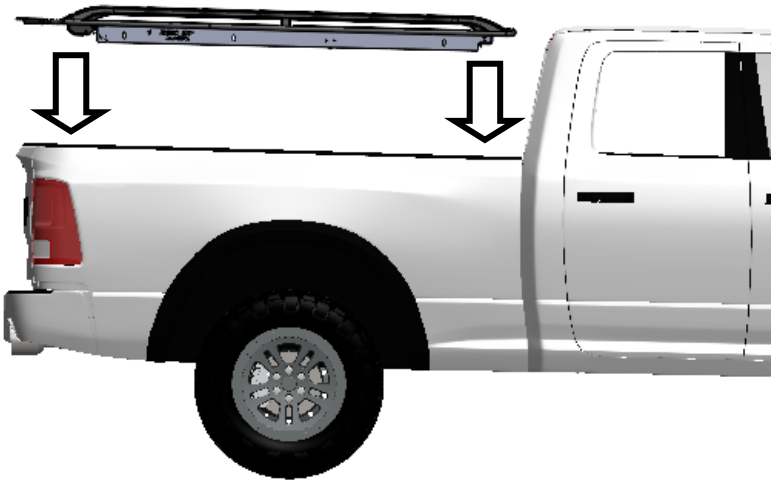

Load-Lid™ Fitting Video

https://wi.st/2OW7L7N

© Copyright Utemaster NZ Ltd.

NZ Support:
P: 0800 683 352
E: sales@utemaster.co.nz
W: www.utemaster.co.nz

Australia Support:
P: 1800 43 345
E: sales@utemaster.com.au
W: www.utemaster.com.au

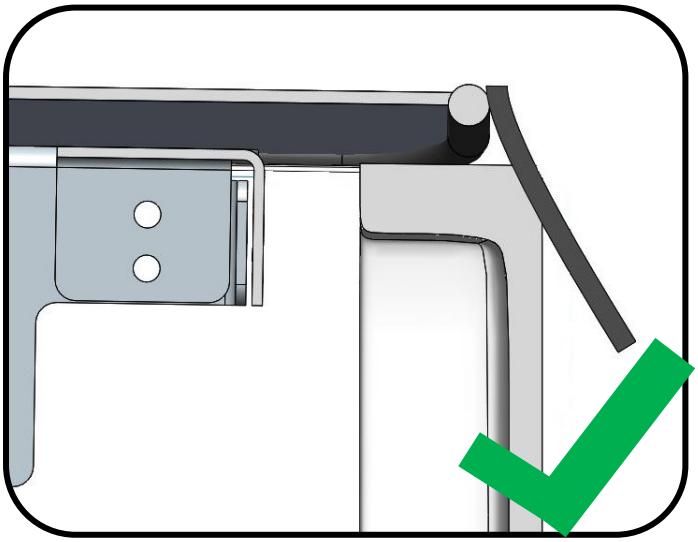

Slight tension on the rubber flap.

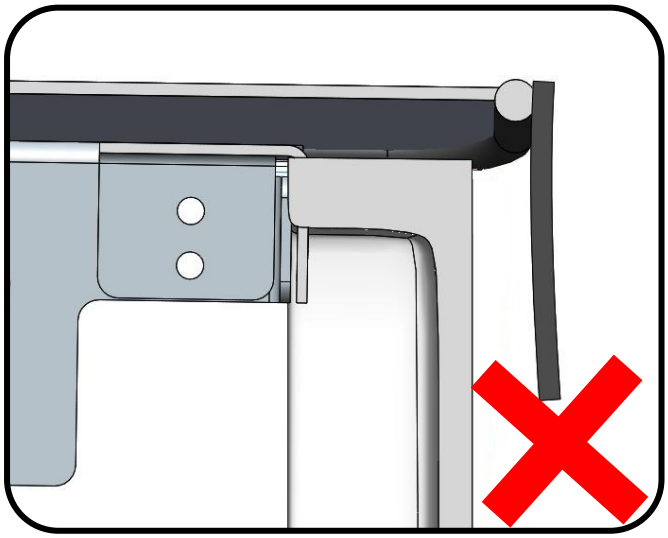

Load-Lid™ is pushed too far forward.

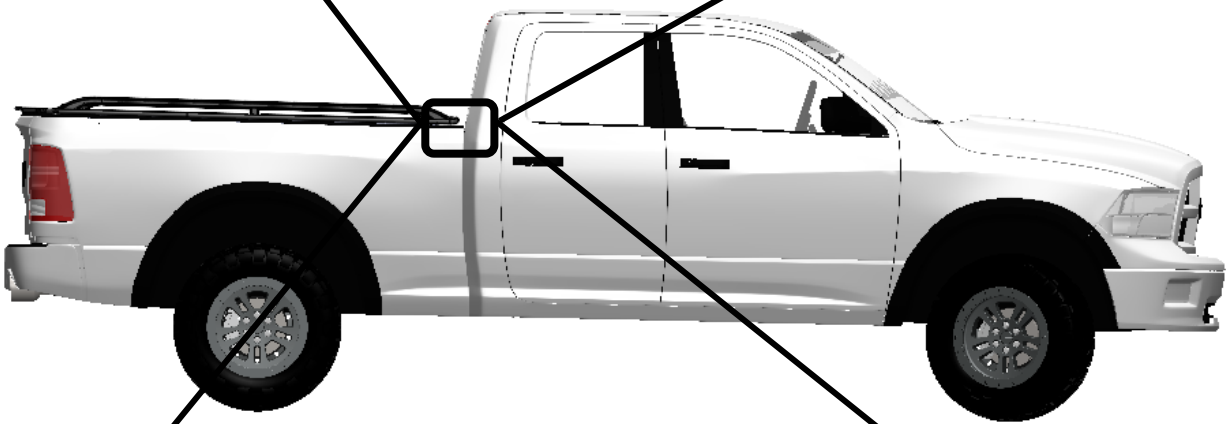

Load-Lid™ is pulled too far back.

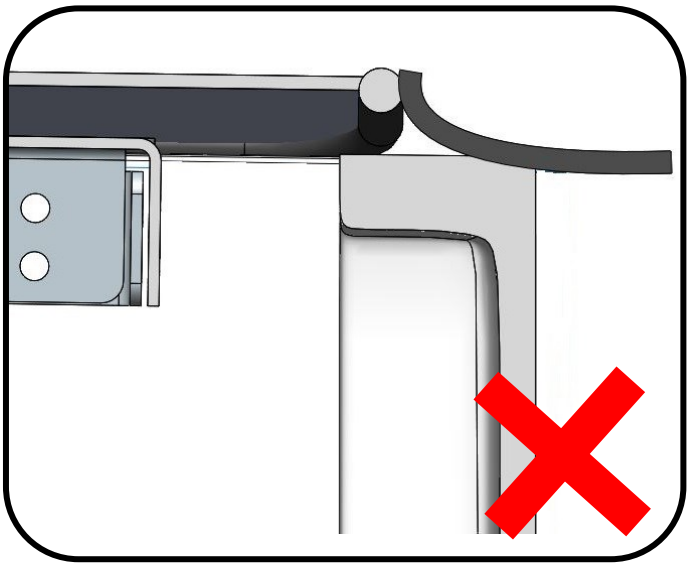

Rubber flap is bunched underneath.

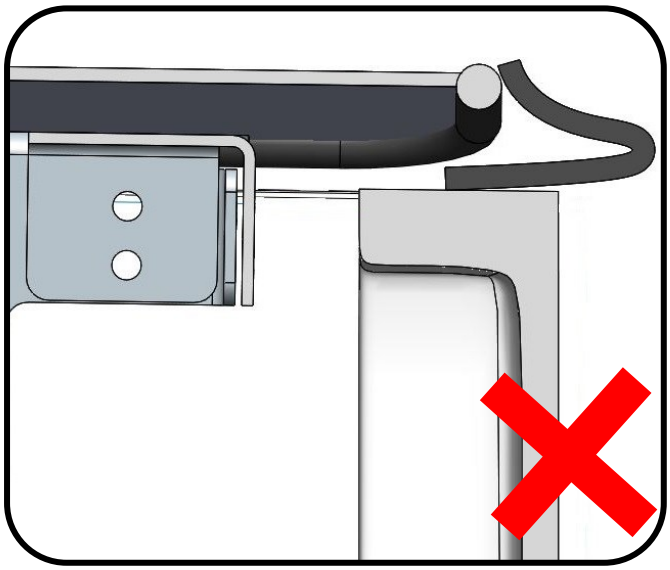

© Copyright Utemaster NZ Ltd.

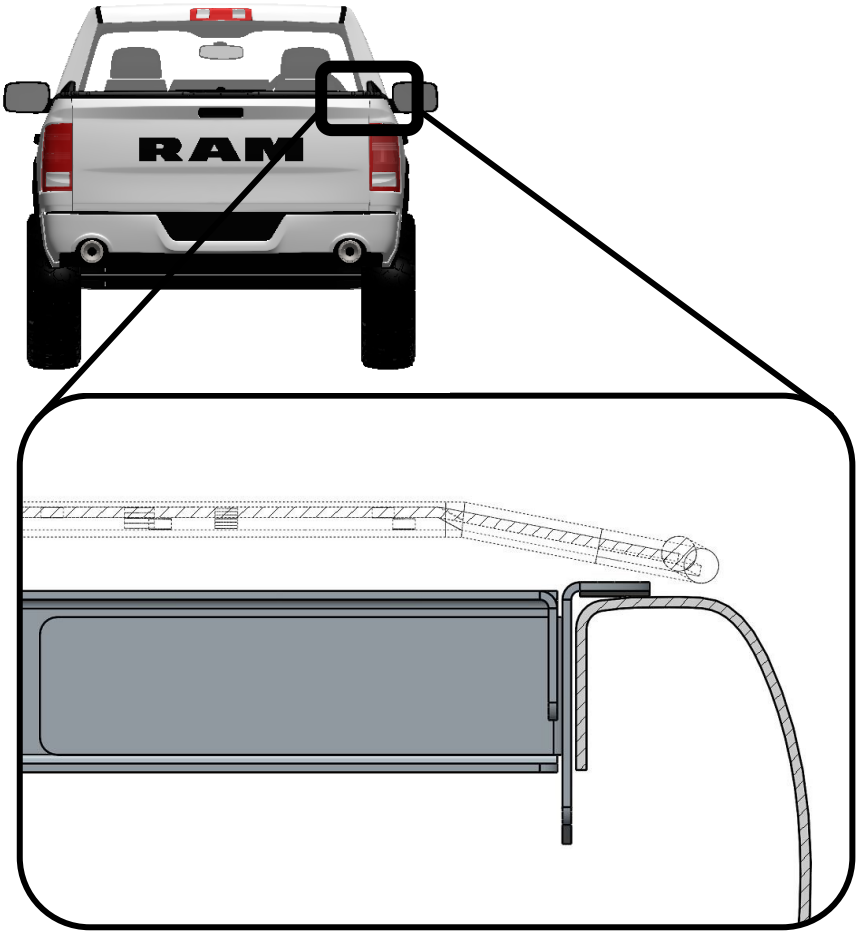

Make sure the Load-Lid is sitting firmly on ***BOTH SIDES.***

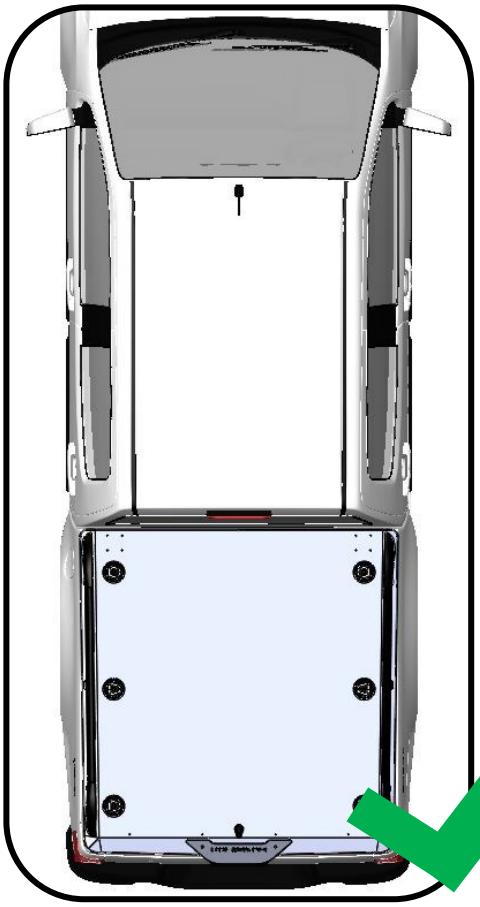

Ensure Load-Lid™ Is sitting square on the tray.

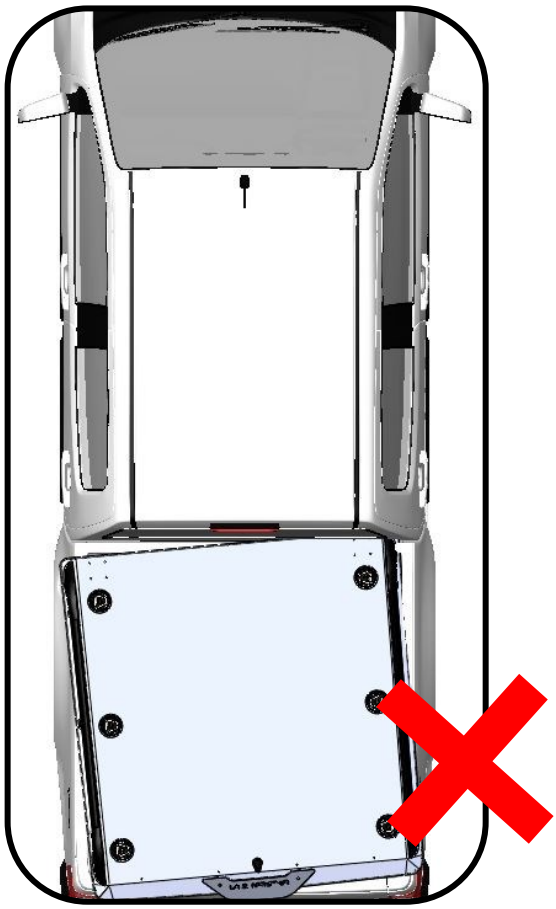

© Copyright Utemaster NZ Ltd.

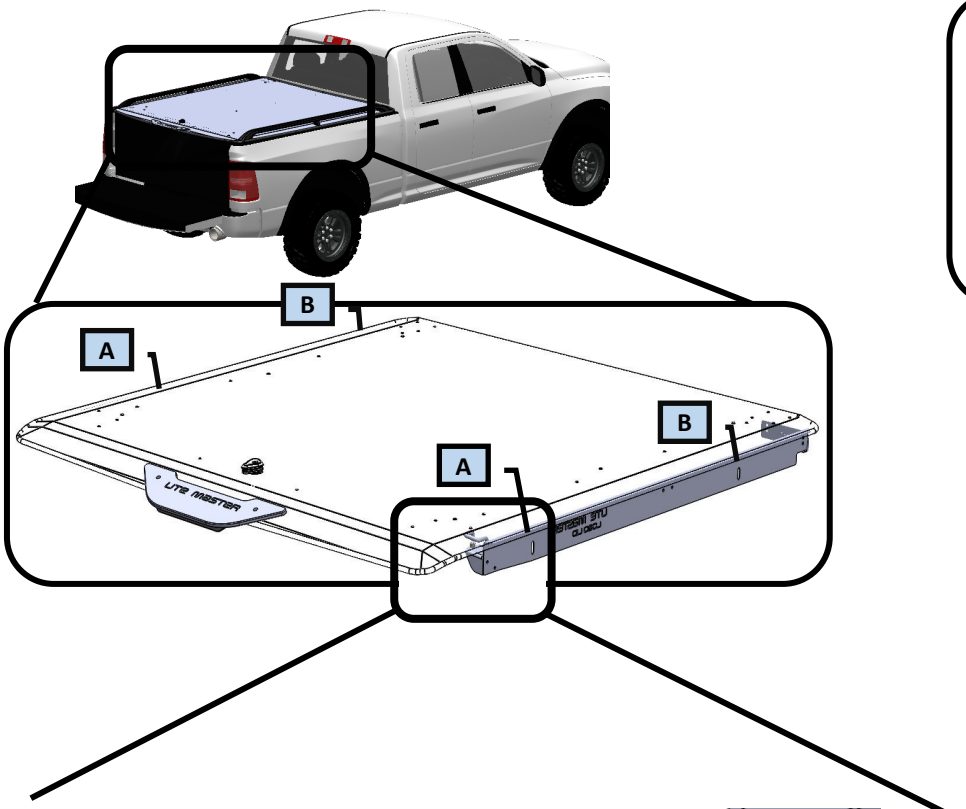

Only clamp through the rear two slots marked '**A**' at this stage.

Use slots marked 'B' in step 7.

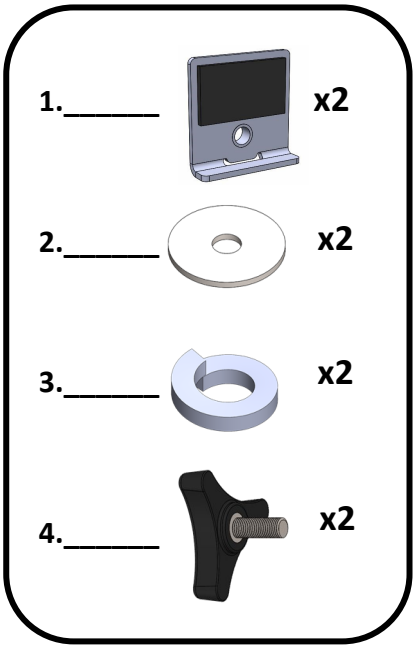

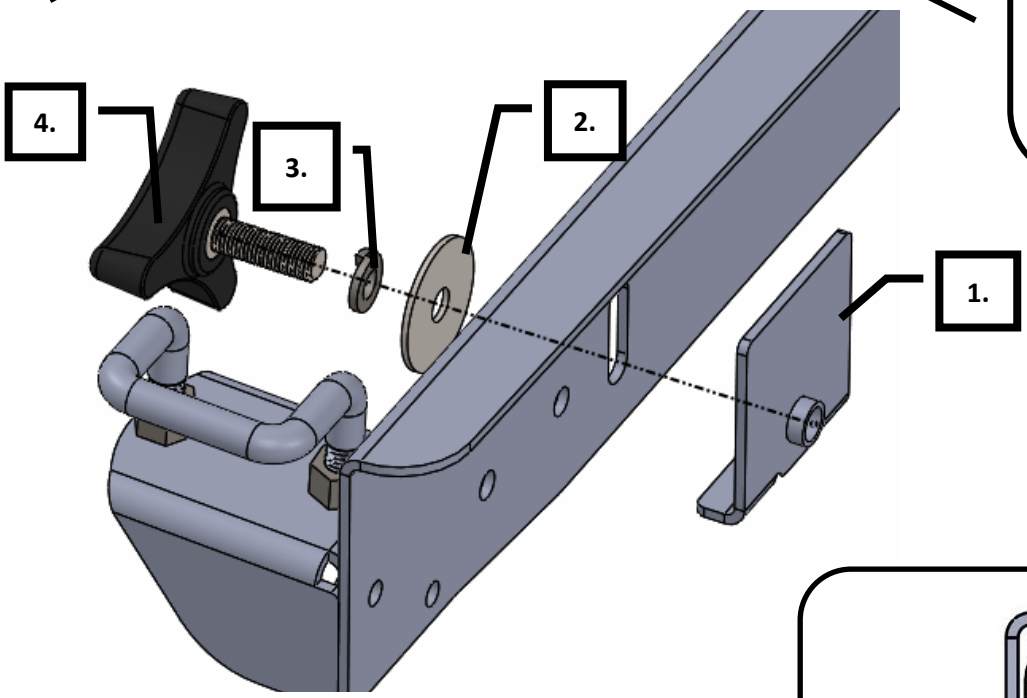

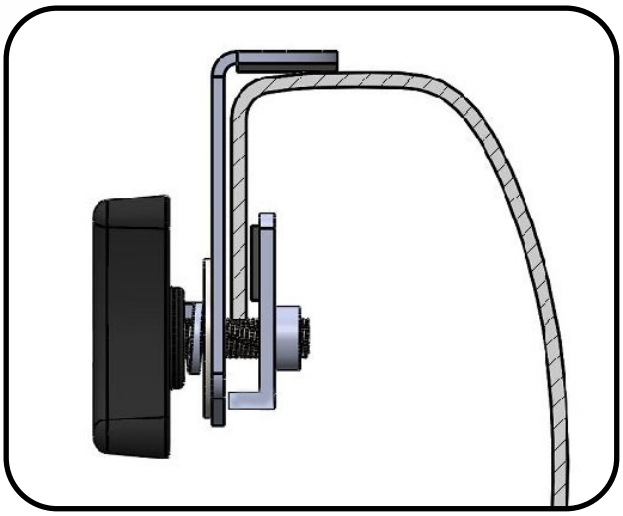

© Copyright Utemaster NZ Ltd.

NZ Support:
P: 0800 683 352
E: sales@utemaster.co.nz
W: www.utemaster.co.nz

Australia Support:
P: 1800 43 345
E: sales@utemaster.com.au
W: www.utemaster.com.au

6

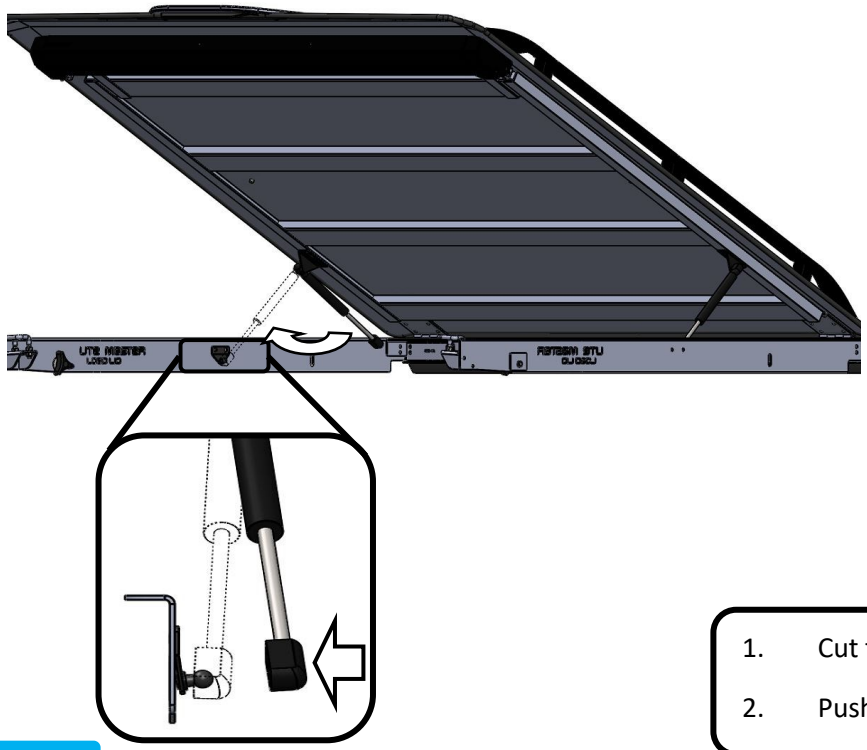

1. Cut the cable ties on ***BOTH SIDES.***
2. Push both gas struts on to ball studs.

7

1._____ x4

2._____ x4

3._____ 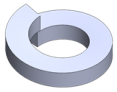 x4

4._____ x4

Clamp through the four remaining slots.

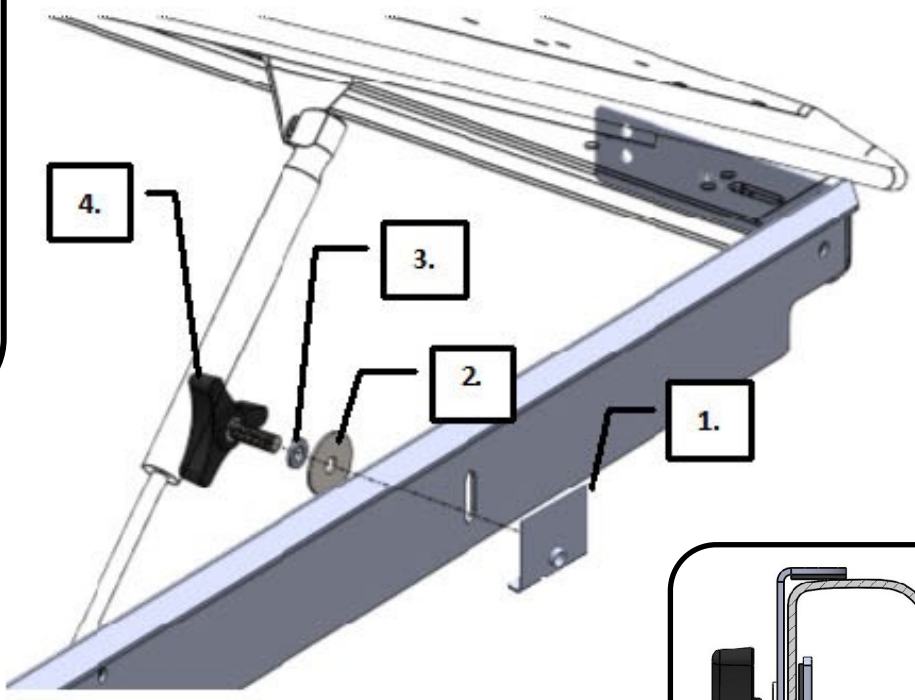

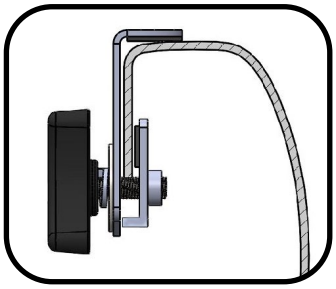

© Copyright Utemaster NZ Ltd.

Slam Lock Adjustment Video.

https://wi.st/2Bp7XJ9

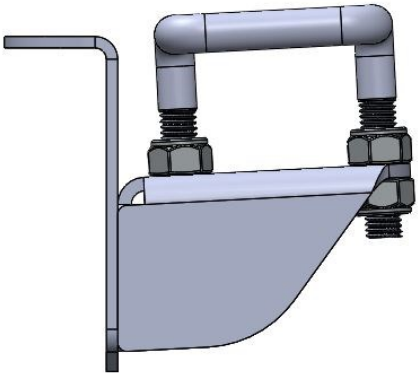

1. Adjust the nuts shown on the lock strike to affect the final closing height of the Load-Lid™
2. Refer to the video shown on the QR code above for details.

IMPORTANT NOTE:

When removing and refitting:

- Disconnect the gas stays and lock the lid into the mounting frame before undoing the clamps and removing the lid (this prevents damaging the tray).
- When refitting the lid, make sure that the rubber flap at the front of the lid is pressing firmly against the front of the tray *(refer to page 3)*.
- If your lid has a rattle when driving, loosen the clamps and move the lid back slightly to ensure the rubber flap is pressing firmly on the front *(refer to page 3)* and re-tighten the clamps.

© Copyright Utemaster NZ Ltd.

NZ Support:
P: 0800 683 352
E: sales@utemaster.co.nz
W: www.utemaster.co.nz

Australia Support:
P: 1800 43 345
E: sales@utemaster.com.au
W: www.utemaster.com.au

Your Load-Lid™ is now fully fitted and ready to use. We recommend frequently tightening the clamps and greasing the lock to enjoy the full benefits of your Load-lid.

Thank you again for using Utemaster and don't forget to keep checking our website for our latest innovations!

© Copyright Utemaster NZ Ltd.