NZ Support:
P: 0800 683 352
E: sales@utemaster.co.nz
W: www.utemaster.co.nz

Australia Support:
P: 1800 43 345
E: sales@utemaster.com.au
W: www.utemaster.com.au

Ford Ranger FX4 & Extended Sports Bar

Load-Lid™

Under Rail Liner Fitting Instructions

© Copyright Utemaster NZ Ltd.

NZ Support:
P: 0800 683 352
E: sales@utemaster.co.nz
W: www.utemaster.co.nz

Australia Support:
P: 1800 43 345
E: sales@utemaster.com.au
W: www.utemaster.com.au

Despatch List:

ID	DESCRIPTION/PART #	IMAGE	QTY
1	50315-01-05R	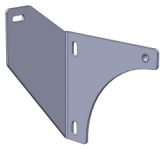	1x
2	50315-01-05L	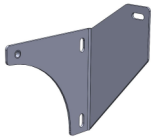	1x
3	50910-04 Foam washer		4x
4	M8 Fender Washer	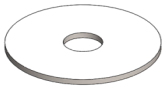	6x
5	M8 Medium Washer	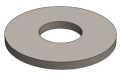	6x
6	M6 Medium Washer		2x
7	M6 Spring Washer	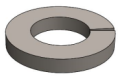	2x
8	M8 Spring Washer	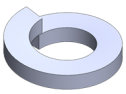	8x
9	TK-M8x25 Tri-Knob		4x
10	M8 Nyloc Nut	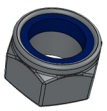	2x

ID	DESCRIPTION/PART #	IMAGE	QTY
11	M8 x 25mm Button Head Bolt		6x
12	M6 x 16mm Button Head Bolt	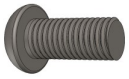	2x
13	M8 x 50mm Countersink Bolt		2x
14	M8 x 30mm Countersink Bolt		2x
15	6mm Foam Feet: 50315-16-06L 50315-16-06R		1x 1x
16	3mm Foam Feet: 50315-16-07L 50315-16-07R		1x 1x
17	6mm Foam Feet: 50315-16-08L 50315-16-08R		1x 1x
18	3mm Foam Feet: 50315-16-09		2x
19	PRT-004705L		1x
20	PRT-004705R		1x
21	CT5		2x

© Copyright Utemaster NZ Ltd.

NZ Support:
P: 0800 683 352
E: sales@utemaster.co.nz
W: www.utemaster.co.nz

Australia Support:
P: 1800 43 345
E: sales@utemaster.com.au
W: www.utemaster.com.au

1

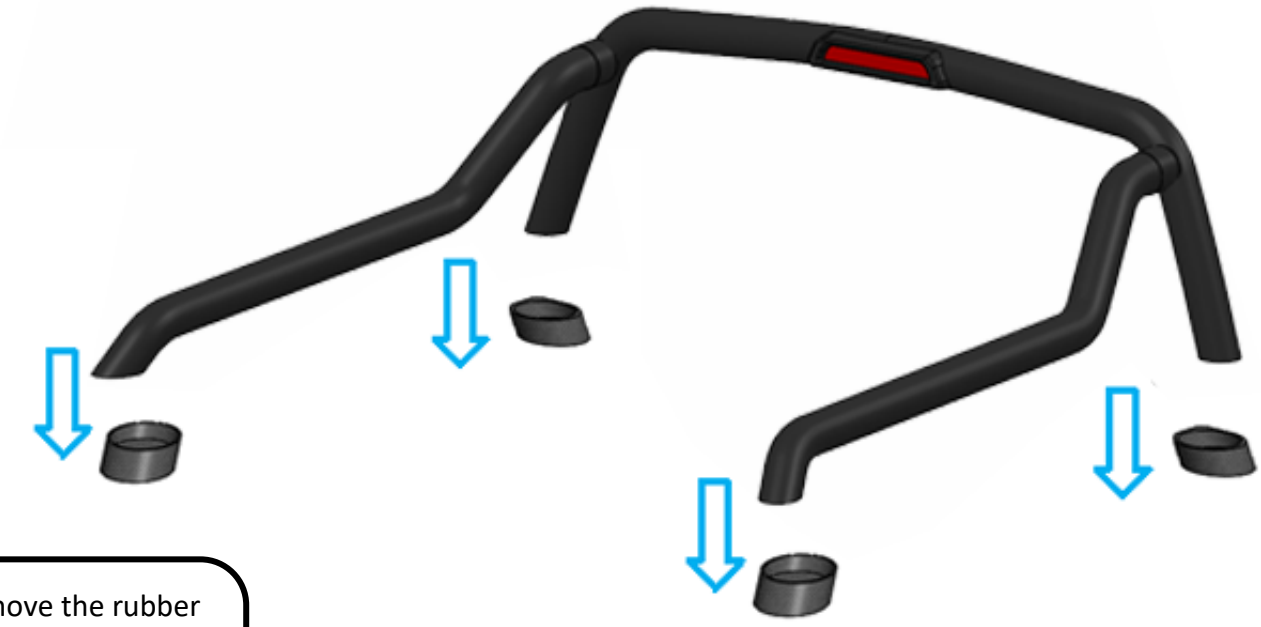

Remove the rubber feet from the Sports Bar.

2

Highly recommend watching the video before installation.

Scan the QR code.

Sports Bar Preparation Video

https://wi.st/2Si0Pnz

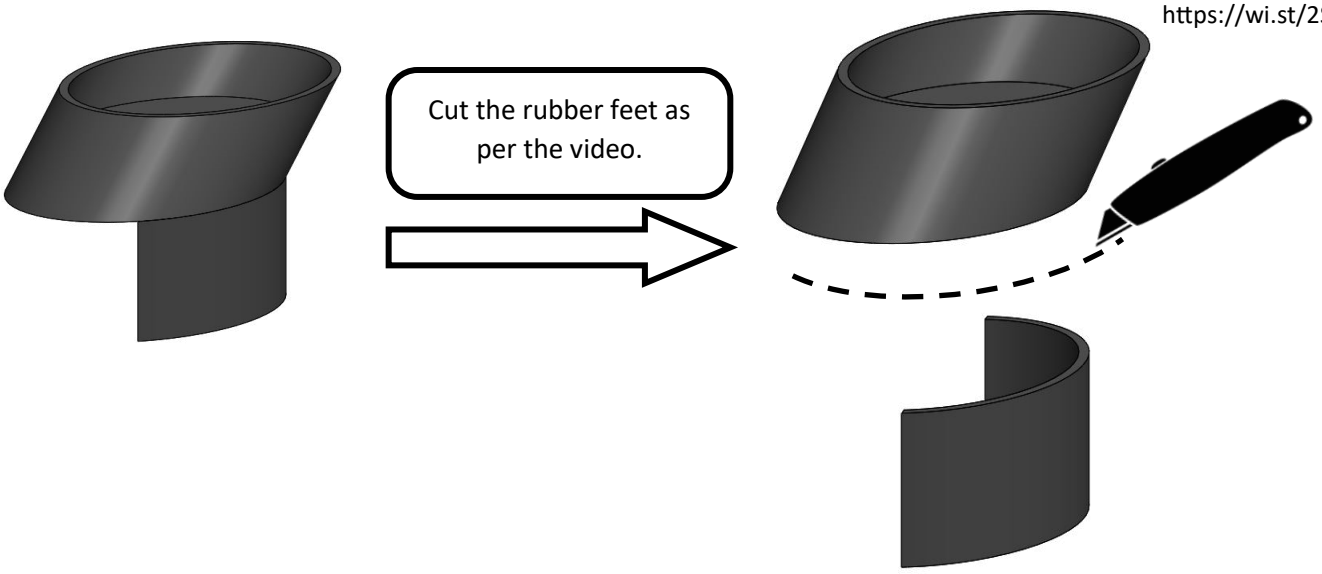

© Copyright Utemaster NZ Ltd.

3

See Despatch List for item ID numbers

Insert foam feet to the sport bar.

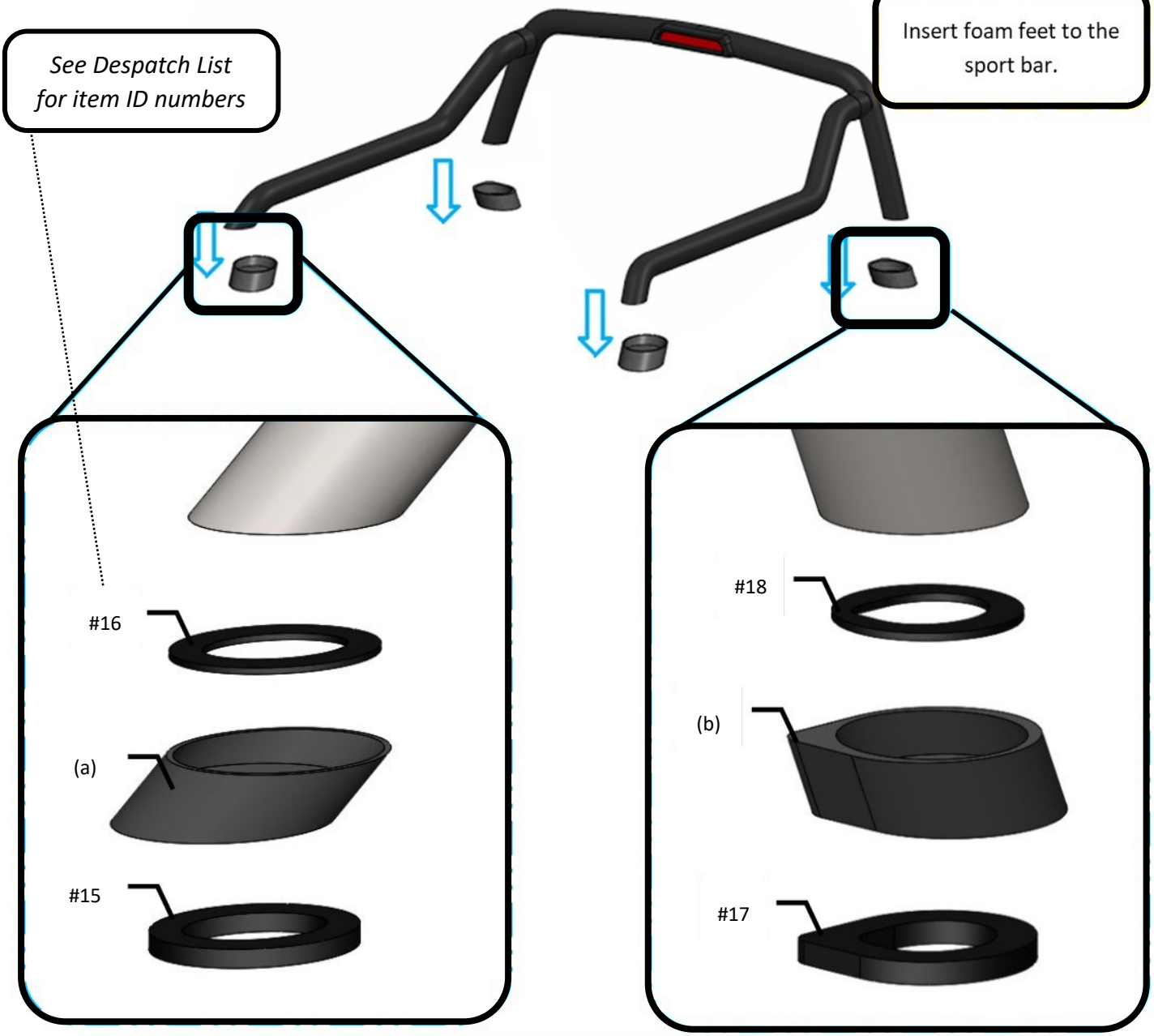

#16		50315-16-07 3mm Foam Foot	x2	#18		50315-16-09 3mm Foam Foot	x2
(a)		Trimmed rubber feet	x2	(b)		Trimmed rubber feet	x2
#15		50315-16-06 6mm Foam Foot	x2	#17		50315-16-08 6mm Foam Foot	1xL 1xR

© Copyright Utemaster NZ Ltd.

4

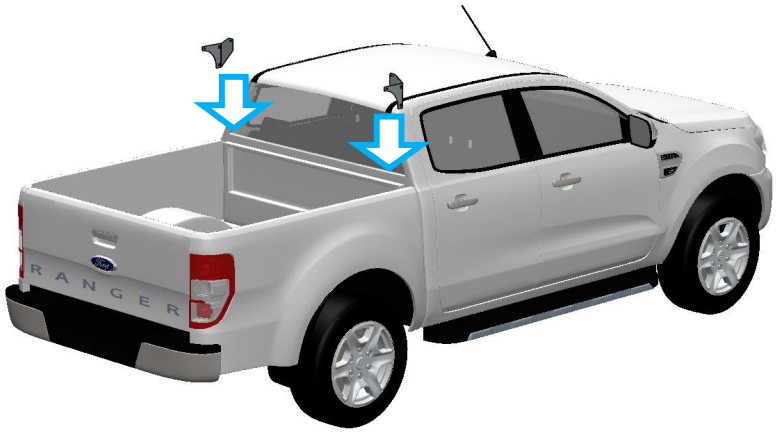

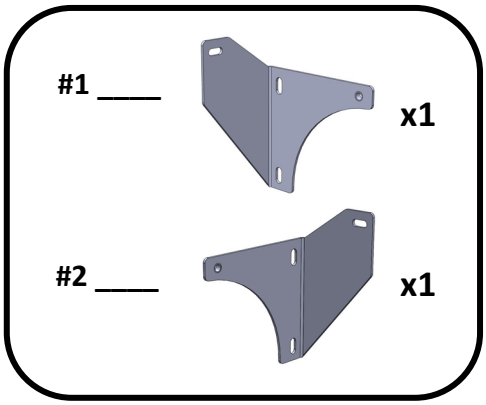

5

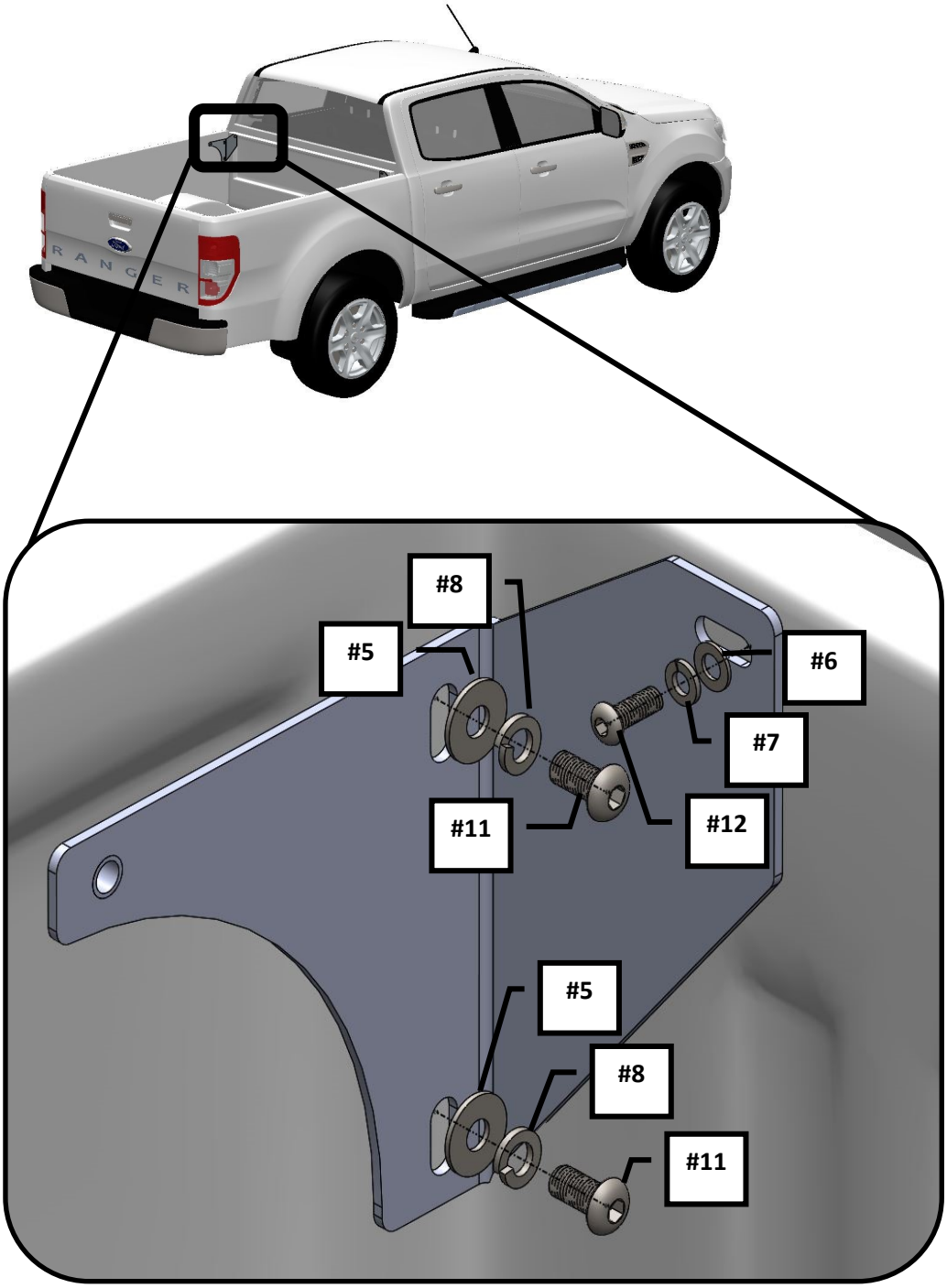

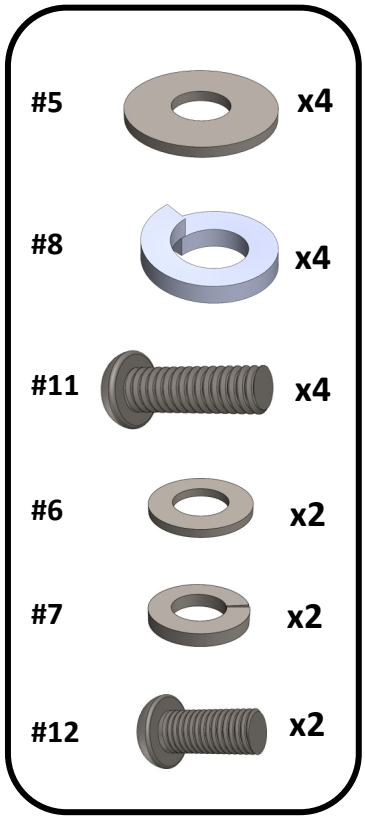

Bolts go into existing threads in the tray.

© Copyright Utemaster NZ Ltd.

NZ Support:
P: 0800 683 352
E: sales@utemaster.co.nz
W: www.utemaster.co.nz

Australia Support:
P: 1800 43 345
E: sales@utemaster.com.au
W: www.utemaster.com.au

6

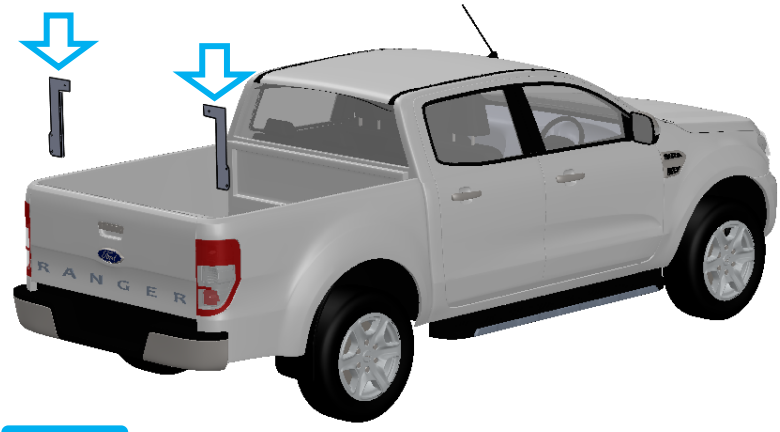

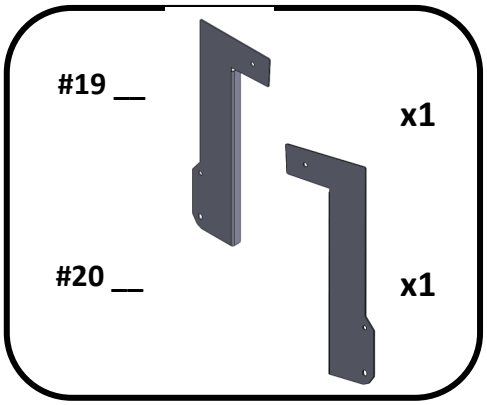

7

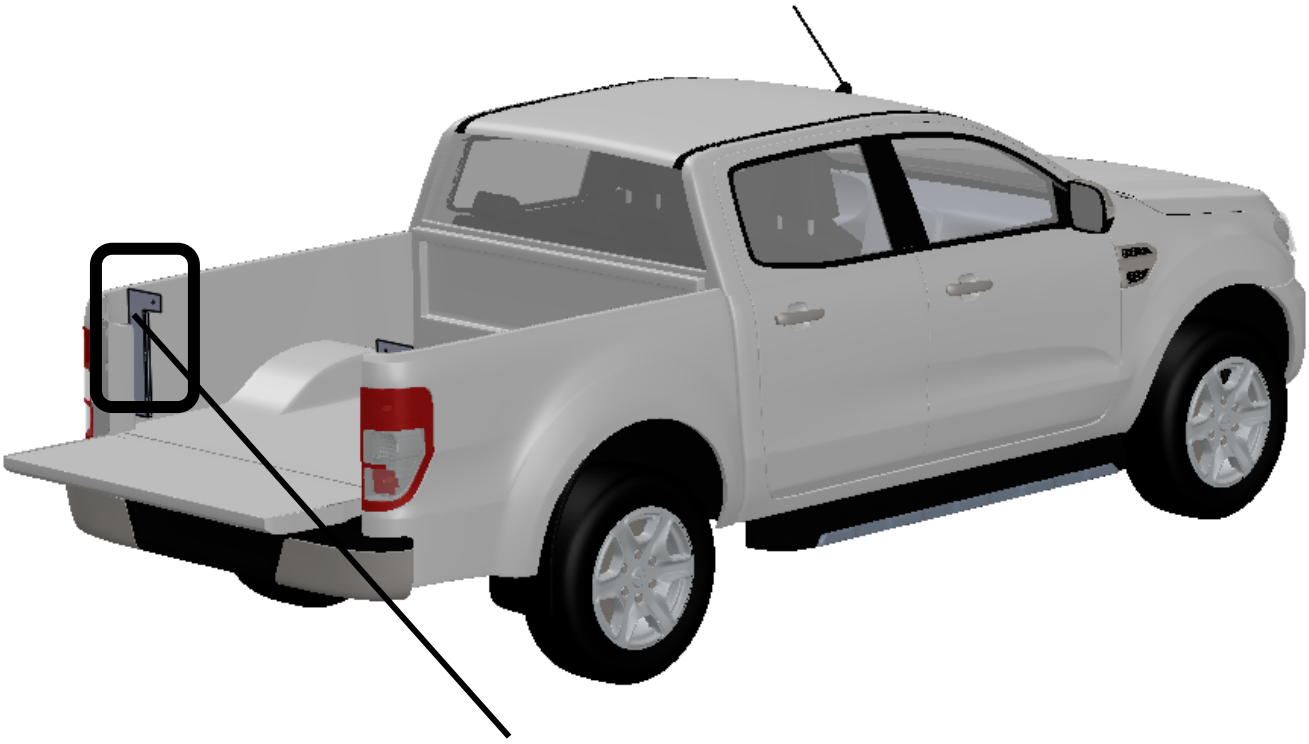

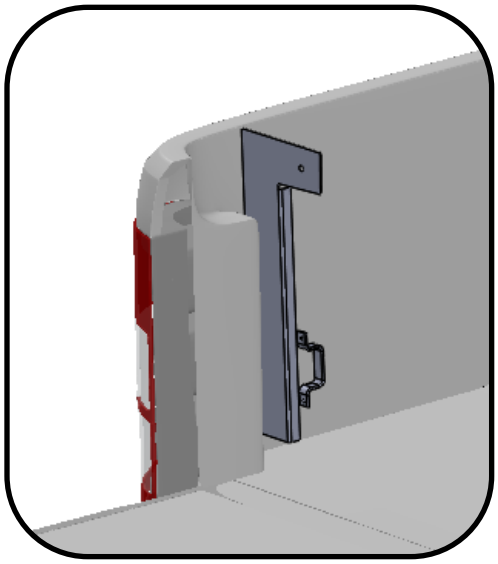

Remove lashing ring, add support bracket, then use existing bolts, to secure tie lashing ring and support

© Copyright Utemaster NZ Ltd.

8

- Fit Foam Washer to face plate to prevent water ingress
- Bolts go into existing threaded holes in the sport bar.
- Begin threading the bolt using a hex key to prevent cross-threading
- Use lubricant if the thread is too tight
- Fasten ***BOTH SIDES.***

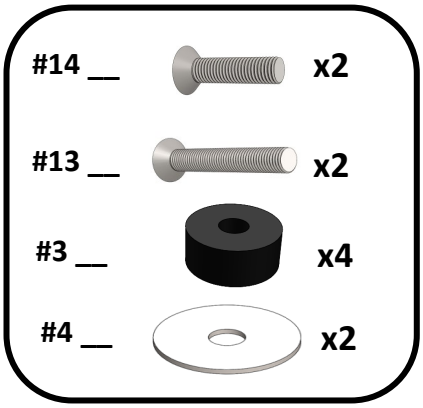

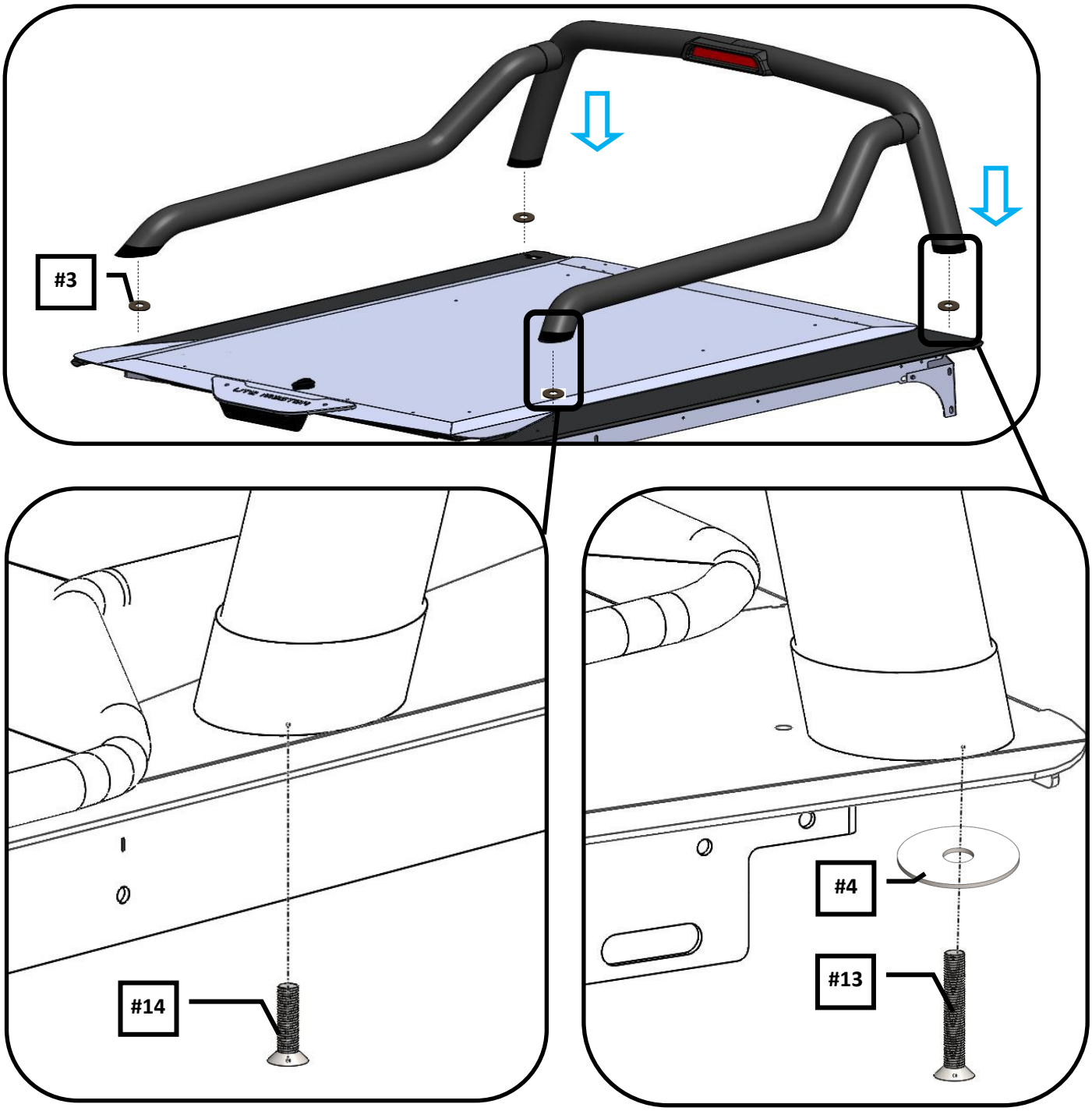

© Copyright Utemaster NZ Ltd.

9

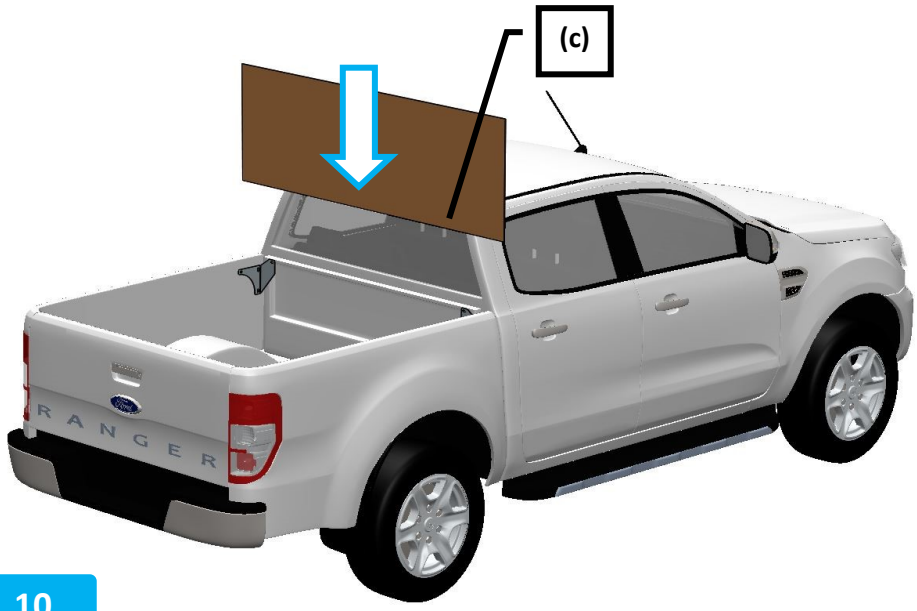

(c) Customer provided cardboard.

Note: Place cardboard between cab and tray to protect the paint from scratching during installation.

10

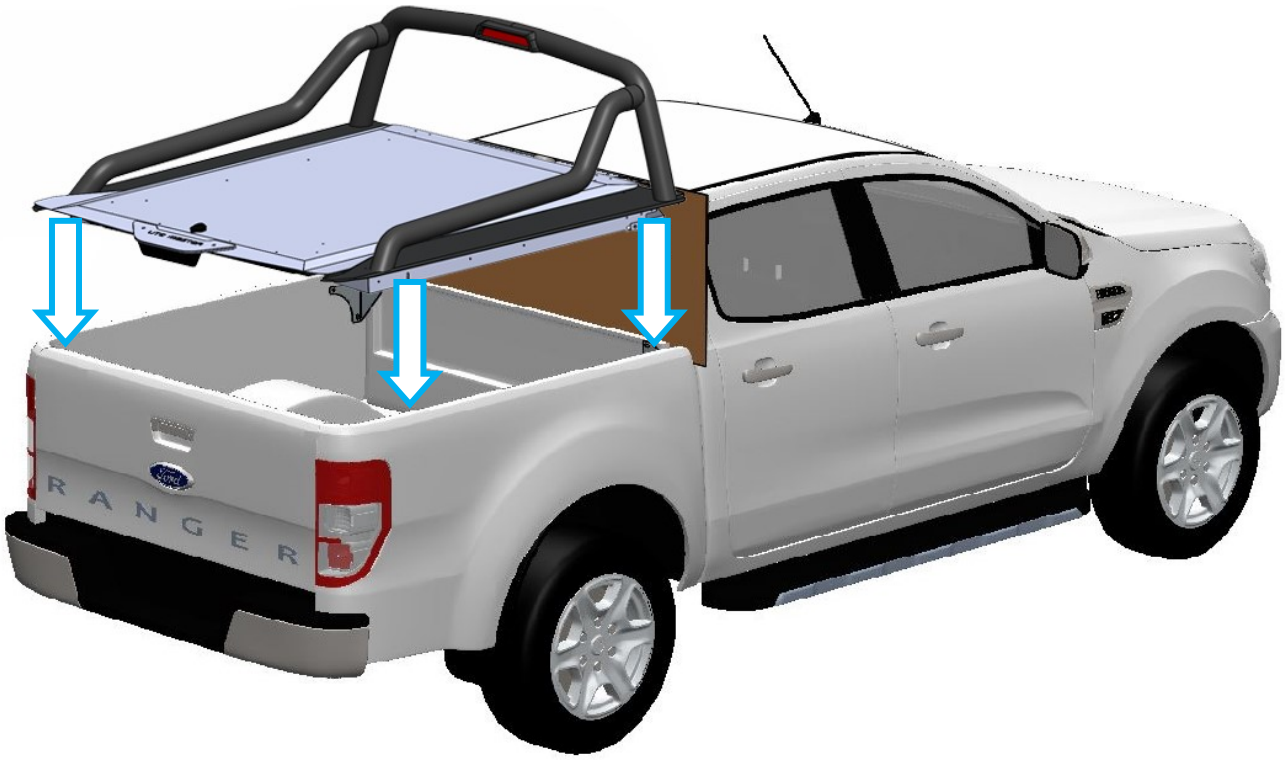

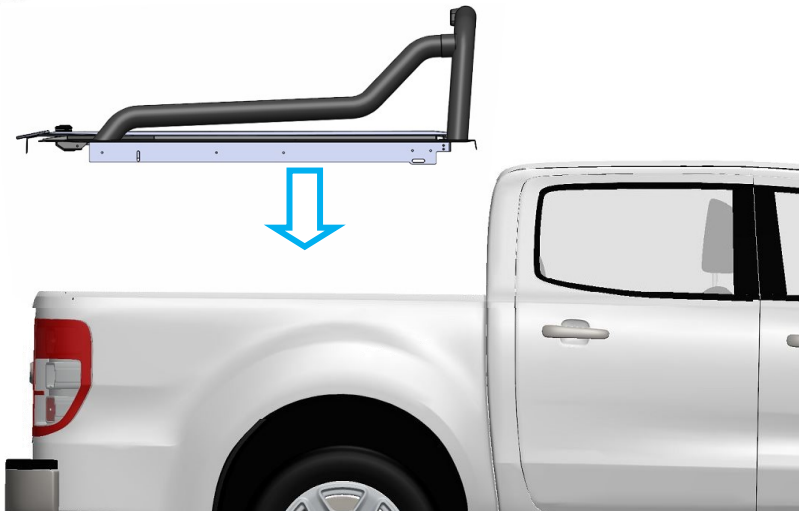

© Copyright Utemaster NZ Ltd.

NZ Support:
P: 0800 683 352
E: sales@utemaster.co.nz
W: www.utemaster.co.nz

Australia Support:
P: 1800 43 345
E: sales@utemaster.com.au
W: www.utemaster.com.au

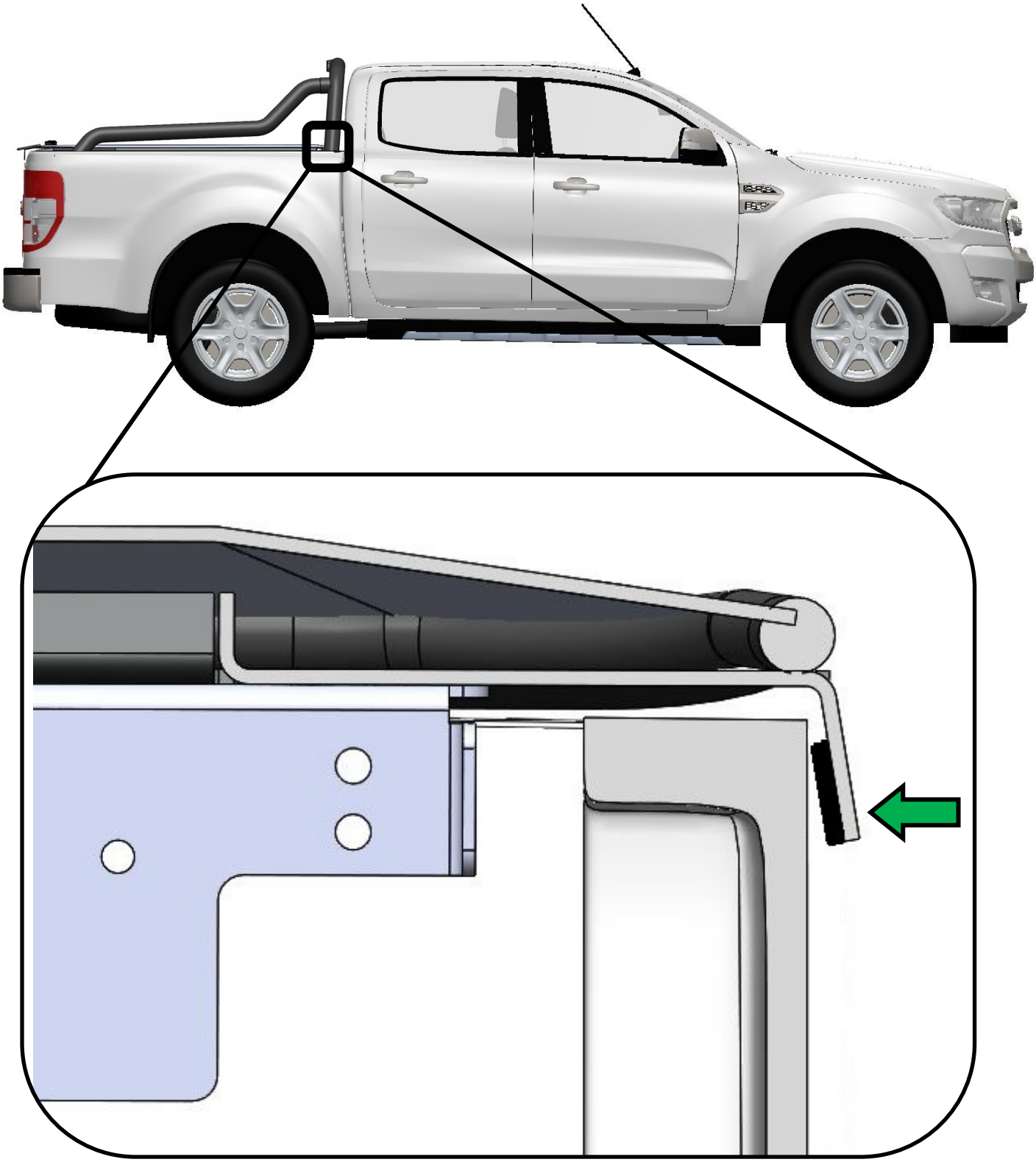

Pull Load-Lid™ back to ensure face plate tab is sitting firmly against the tray.

© Copyright Utemaster NZ Ltd.

12

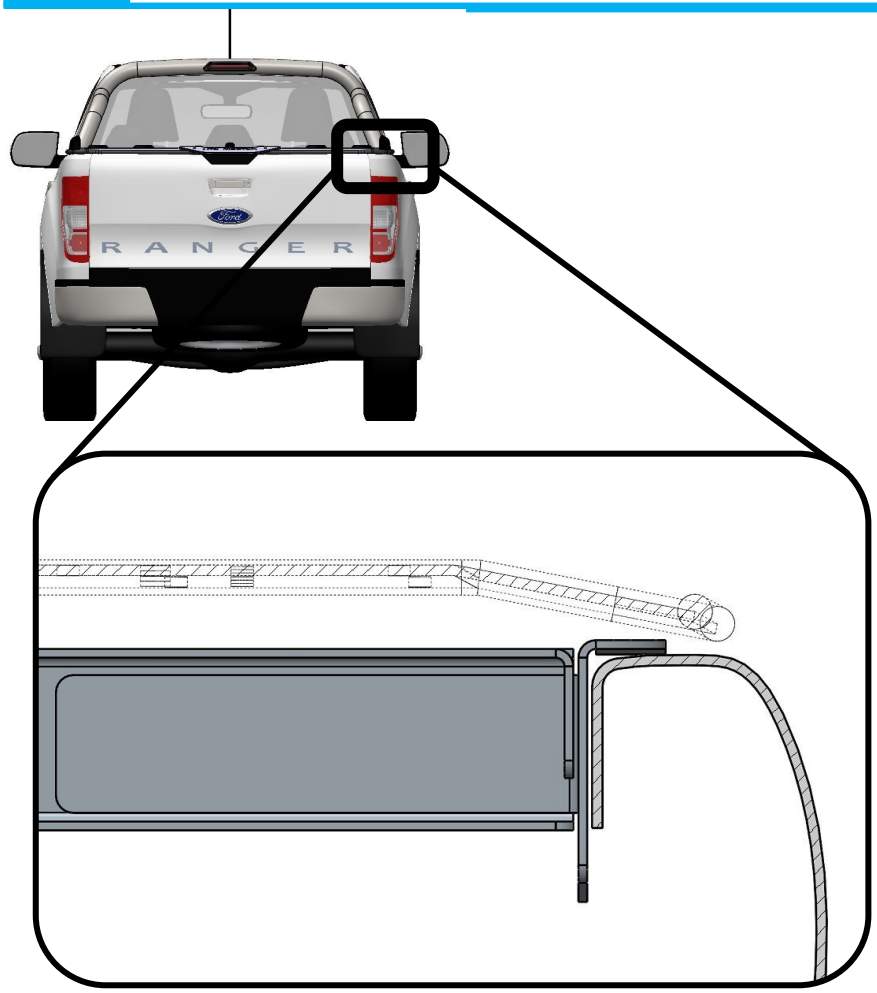

Make sure the Load-Lid is sitting firmly on ***BOTH SIDES.***

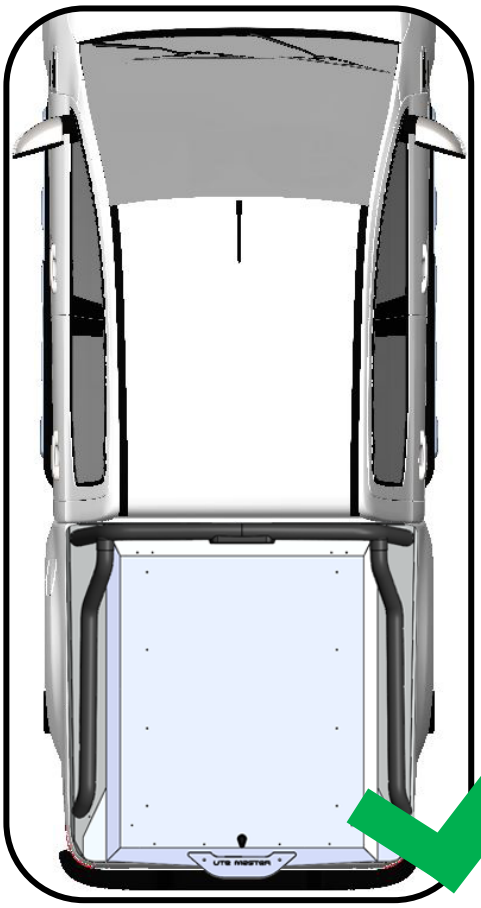

Ensure Load-Lid™ Is sitting square on the tray.

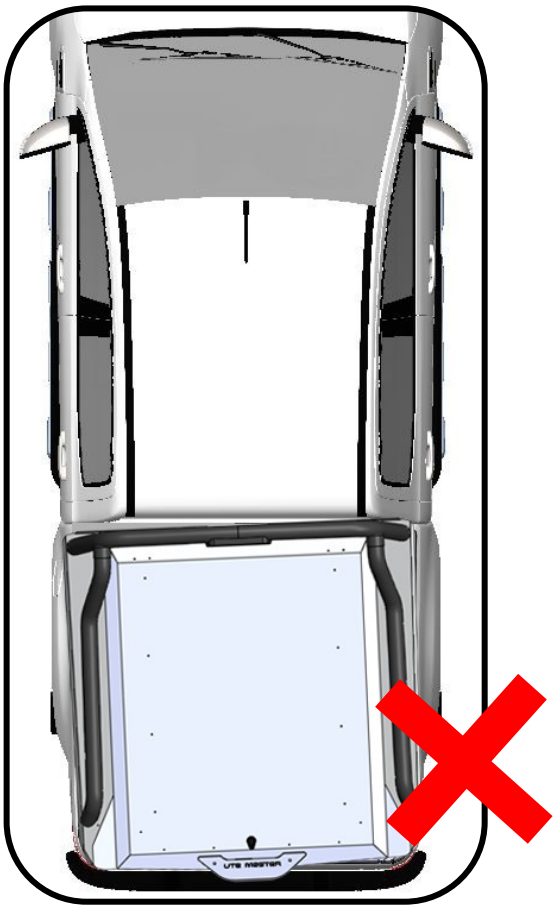

© Copyright Utemaster NZ Ltd.

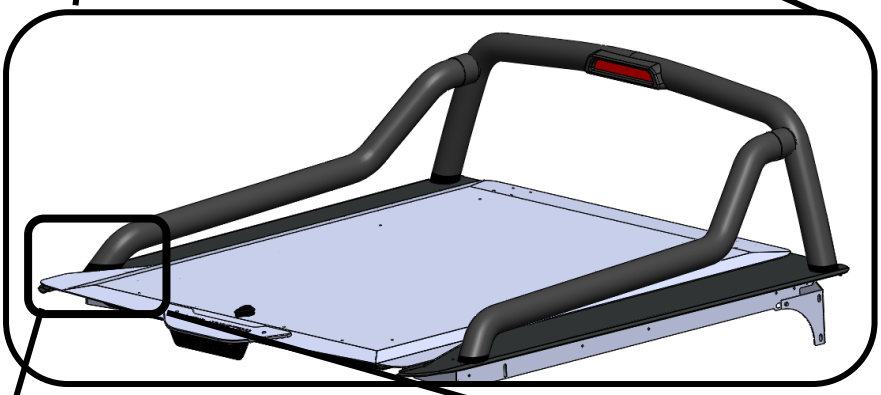

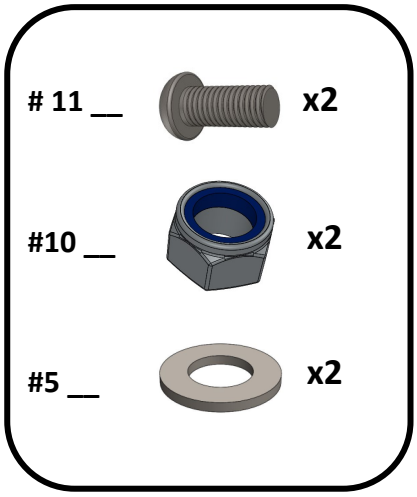

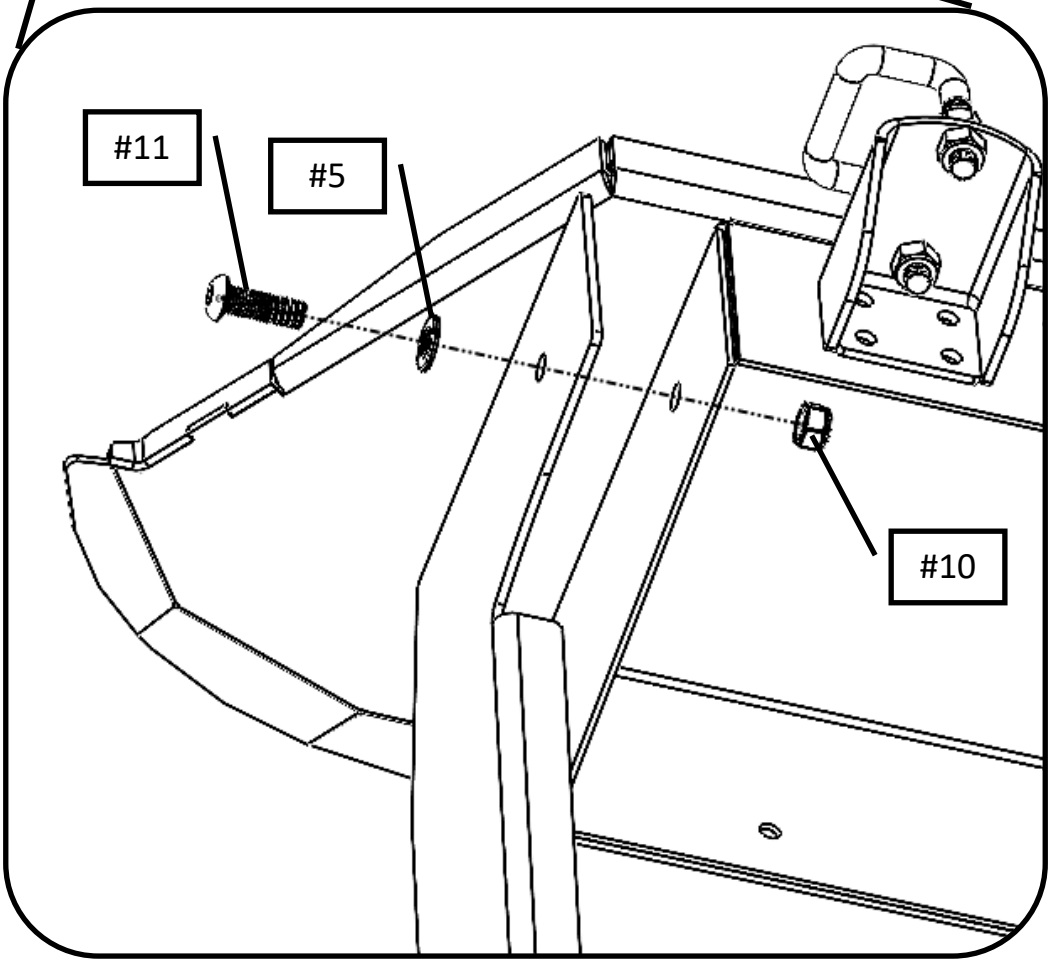

© Copyright Utemaster NZ Ltd.

NZ Support:
P: 0800 683 352
E: sales@utemaster.co.nz
W: www.utemaster.co.nz

Australia Support:
P: 1800 43 345
E: sales@utemaster.com.au
W: www.utemaster.com.au

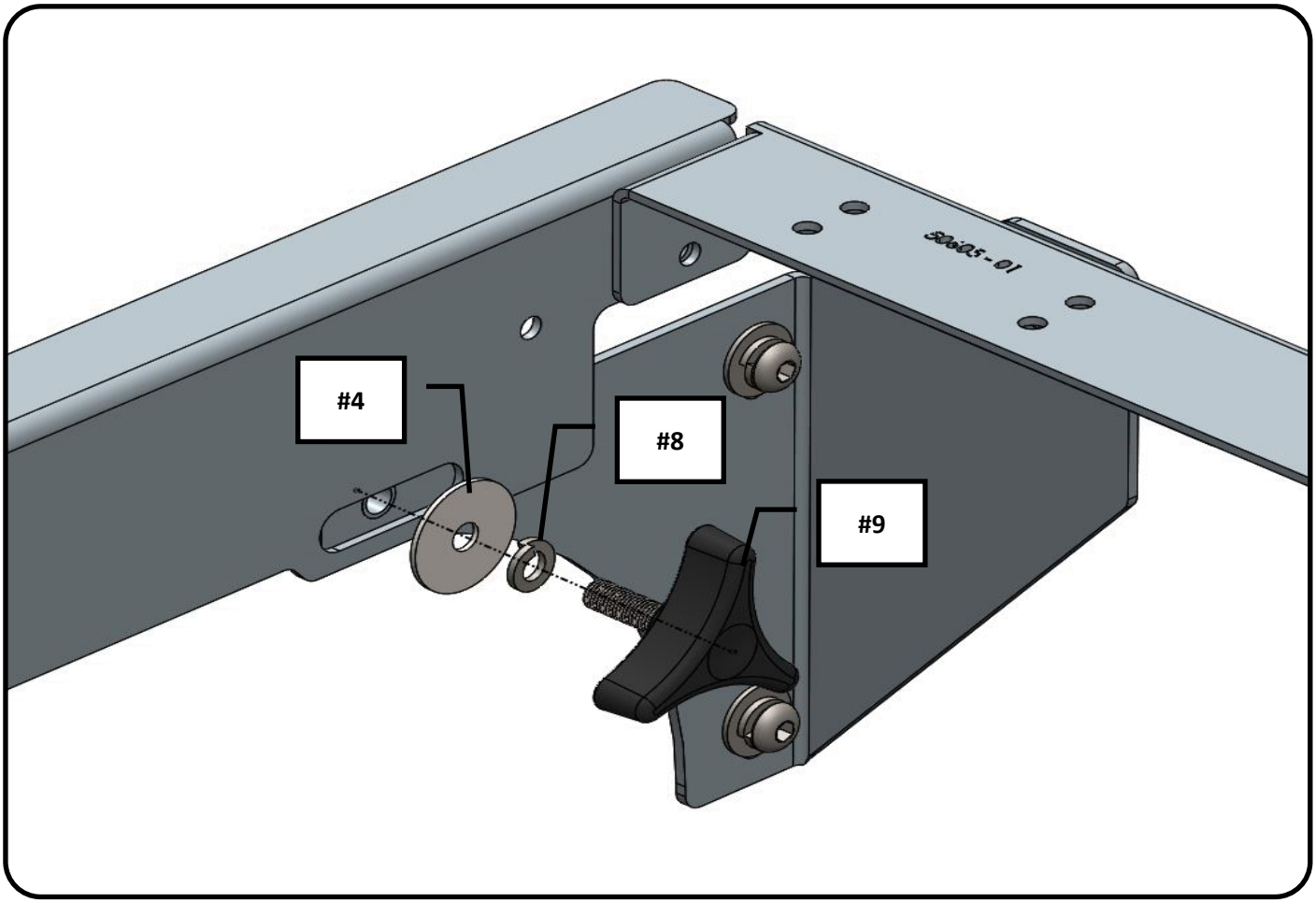

Clamp through the two slots.

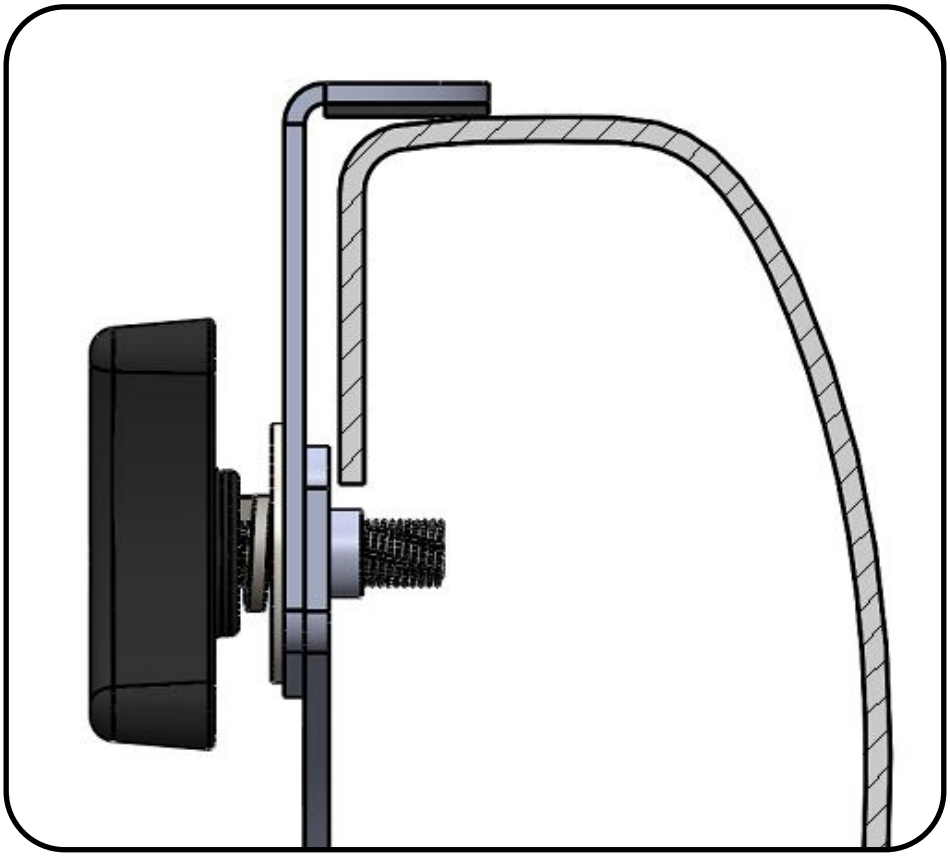

#4 ___ x2

#8 ___ 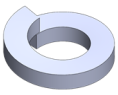 x2

#9 ___ x2

© Copyright Utemaster NZ Ltd.

15

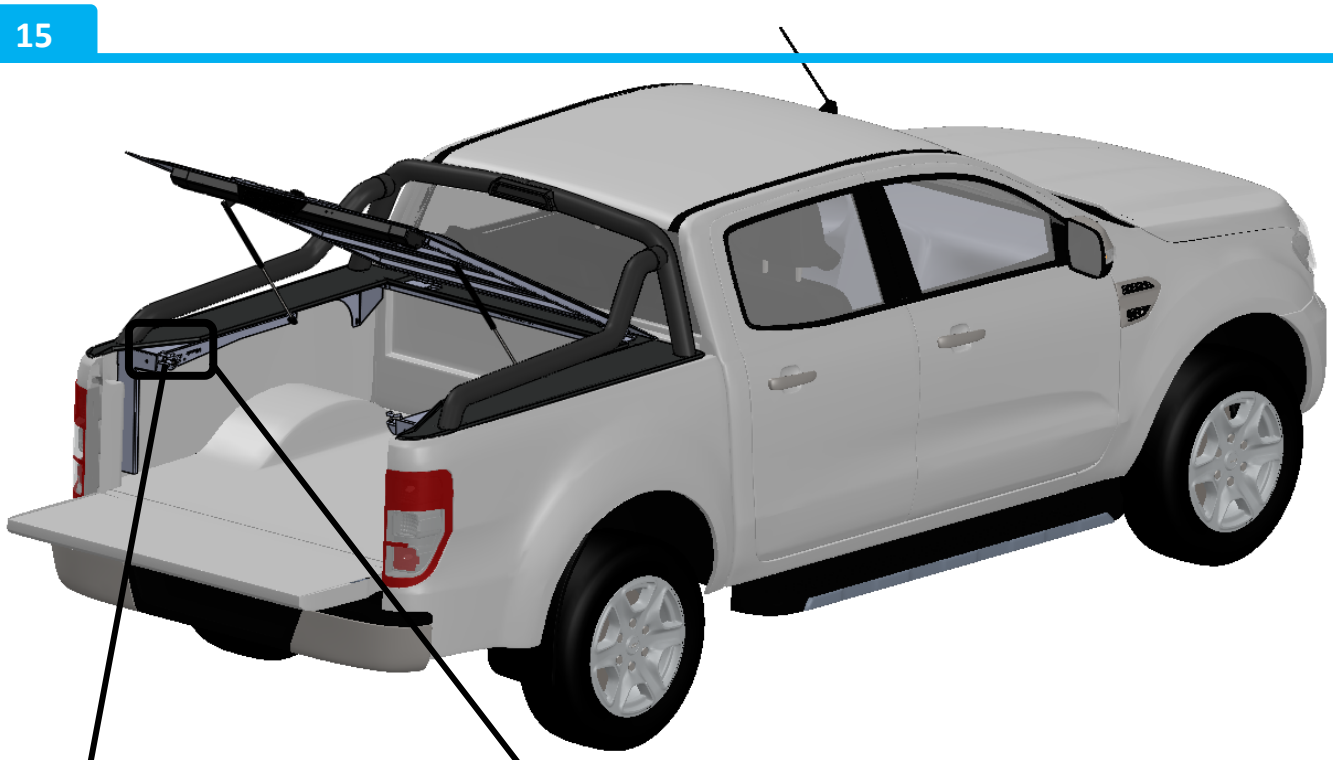

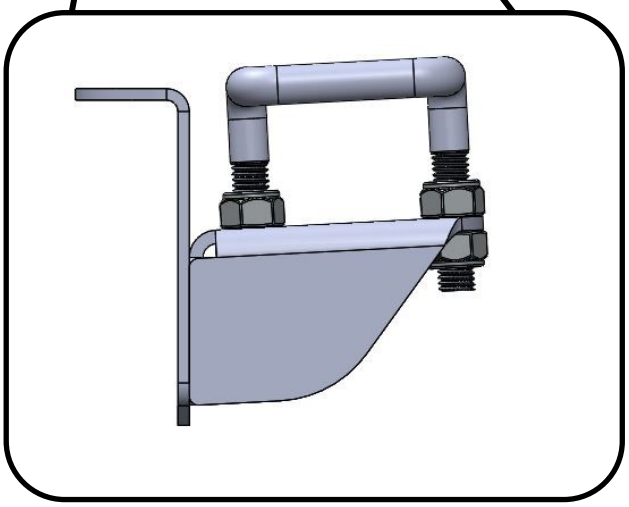

Adjust the nuts shown on the lock strike to affect the final closing height of the Load-Lid™

Refer to the video shown on the QR code details.

Slam Lock Adjustment Video.

https://wi.st/2Bp7XJ9

IMPORTANT NOTE:

When removing and refitting lock the lid into the mounting frame before undoing the clamps and removing the lid (this prevents damaging the tray).

Your Load-Lid™ is now fully fitted and ready to use. We recommend frequently tightening the clamps and greasing the lock to enjoy the full benefits of your Load-lid.

Thank you again for using Utemaster and don't forget to keep checking www.utemaster.co.nz for our latest innovations!

© Copyright Utemaster NZ Ltd.